Basler AG | October 2026

rc_randomdot Random Dot Projector

ASSEMBLY AND OPERATING MANUAL

Revisions

This product may be modified without notice, when necessary, due to product improvements, modifications, or changes in specifications. If such modification is made, the manual will also be revised; see revision information.

Documentation Revision Rev 1.0, Oct 11, 2026

Applicable to *rc_randomdot* Hardware Rev 01

Manufacturer
Effilux
1, Rue de Terre Neuve
Mini Parc du Verger
Bâtiment E
91940 Les Ulis, France
Web: https://www.effilux.com
Email: contact@effilux.fr
Phone: +33 9 72 38 17 80

Distributor
Basler AG
An der Strusbek 60-62
D-22926 Ahrensburg
Germany

Web: https://www.baslerweb.com
Email: info@baslerweb.com
Phone: +49 4102 463 0

Contents

1 Introduction **3**
- 1.1 Overview . . . 4
- 1.2 Warranty . . . 5
- 1.3 Applicable standards . . . 6
- 1.4 Electronical and safety standards . . . 6
- 1.5 Environmental regulation . . . 7
- 1.6 Information on disposal . . . 8

2 Safety **9**
- 2.1 General warnings . . . 9
- 2.2 Intended use . . . 10

3 Hardware specification **11**
- 3.1 Scope of delivery . . . 11
- 3.2 Technical specification . . . 11
- 3.3 Mechanical dimensions . . . 12
- 3.4 Environmental and operating conditions . . . 12
- 3.5 Power-supply specifications . . . 13
- 3.6 Wiring . . . 13
- 3.7 Electrical properties . . . 16
- 3.8 Optical properties . . . 17

4 Installation **18**
- 4.1 Mounting . . . 18
- 4.2 Power-up . . . 19
- 4.3 Operating the projector . . . 20
- 4.4 Adjusting focus . . . 21
- 4.5 Adjusting aperture . . . 21

5 Maintenance **23**
- 5.1 Lens cleaning . . . 23

6 Accessories **24**
- 6.1 Connectivity kit . . . 24
- 6.2 Wiring . . . 24
- 6.3 Spare parts . . . 25

7 Troubleshooting **26**
- 7.1 LED colors . . . 26
- 7.2 Hardware issues . . . 26

8 Contact **28**
- 8.1 Support . . . 28
- 8.2 Address . . . 28

Index **29**

1 Introduction

Indications in the manual

To prevent damage to the equipment and ensure the user's safety, this manual indicates each precaution related to safety with *Warning*. Supplementary information is provided as a *Note*.

Warning: Warnings in this manual indicate procedures and actions that must be observed to avoid danger of injury to the operator/user, or damage to the equipment. Software-related warnings indicate procedures that must be observed to avoid malfunctions or unexpected behavior of the software.

Note: Notes are used in this manual to indicate supplementary relevant information.

1.1 Overview

The dot-matrix projector *rc_randomdot* is specifically tailored to be used with an *rc_visard*. The *rc_randomdot* is utilized when the perception of particularly difficult scenes with little or no natural texture is required. It can be mounted over a scene or directly on any *rc_visard*. By projecting a semirandom dot pattern, it increases the scene density and hence improves the quality of stereo matching when the natural scene texture is low.

The terms “projector”, “*rc_randomdot White*”, and “*rc_randomdot*” used throughout the manual all refer to the Effilux *rc_randomdot* family of semirandom dot projectors with rectangular housing. Installation and control for all projectors are exactly the same, and all use the same mounting base.

Note: This manual uses the metric system and mostly uses the units meter and millimeter. Unless otherwise specified, all dimensions in technical drawings are in millimeters.

1.2 Warranty

Any changes or modifications to the hard- and software not expressly approved by Effilux could void the user's warranty and guarantee rights.

Warning: The *rc_randomdot* utilizes complex hardware technology that may behave in a way not intended by the user. The purchaser must design its application to ensure that any failure of the *rc_randomdot* does not cause personal injury, property damage, or other losses.

Warning: Do not attempt to take apart, open, service, or modify the *rc_randomdot*. Doing so could present the risk of electric shock or other hazard. Any evidence of any attempt to open and/or modify the device, including any peeling, puncturing, or removal of any of the labels, will void the Limited Warranty.

Warning: CAUTION: to comply with the European CE requirement, all signal cables used to connect this device must be shielded and the device must be grounded. Operation with incorrect cables may result in interference with other devices or undesired effects of the product.

Note: This product may not be treated as household waste. By ensuring this product is disposed of correctly, you will help to protect the environment. For more detailed information about the recycling of this product, please contact your local authority, your waste disposal service provider, or the product's supplier.

1.3 Applicable standards

1.3.1 Approvals

The *rc_randomdot* has received the following approvals:

EC Declaration of Conformity

UK Conformity Assessed

NRTL Safety Certified by TÜV Süd

Changes or modifications not expressly approved by the manufacturer could void the user's authority to operate the equipment. This device complies with Part 15 of the FCC rules. Operation is subject to the following two conditions:

1. This device may not cause harmful interference, and
2. this device must accept any interference received, including interference that may cause undesired operation.

IP54 ingress protection according IEC standard 60529

ROHS compliant according to EU directive 2011/65/EU

WEEE compliant according to EU directive 2012/19/EC

1.4 Electronical and safety standards

The *rc_randomdot* has been tested to be in compliance with the following standards:

- EN 55015:2013 : Electromagnetic compatibility (EMC) Directive (2014/30/EU), Limits and methods of measurement of radio disturbance characteristics of electrical lighting and similar equipment
- CISPR 15:2013 + IS1:2013 + IS2:2013 : Limits and methods of measurement of radio disturbance characteristics of electrical lighting and similar equipment
- EN 61547:2009 : Equipment for general lighting purposes - EMC immunity requirements
- EN 61000-6-2 : Electromagnetic compatibility (EMC): Immunity standard for industrial environments
- EN 61000-6-4 : Electromagnetic compatibility (EMC): Emission standard for industrial environments
- EN/IEC/UL 62368-1:2014 : Audio/Video, Information and Communication Technology Equipment - Safety Requirements
- EN 61010-1 : Safety requirements for electrical equipment for measurement, control, and laboratory use
- CAN/CSA-C22.2 No. 62368-1:2014 Audio/Video, Information and Communication Technology Equipment - Safety Requirements
- EN 62471:2008 / IEC 62471:2008 : Photobiological safety of lamps and lamp systems
- Compliant with FCC 47 CFR Part 15B:2017: Radio Frequency Devices
- Compliant for Canada according to CAN ICES-005(B)/NMB-005(B)

1.5 Environmental regulation

1.5.1 EU RoHS Directive

As supplier of LED lighting systems, EFFILUX declares that the products manufactured by Effilux are compliant with the EU RoHS 2 Directive 2011/65/EU on the restriction of the use of certain hazardous substances in electrical and electronic equipment:

- Lead (<0.1%)
- Mercury (<0.1%)
- Cadmium (<0.01%)
- Hexavalent Chromium (<0.1%)
- Polybromobiphényles (PBB) (<0.1%)
- Polybromodiphényléthers (PBDE) (<0.1%)

Items that are exempted in the RoHS Directive are excluded from these standards.

1.5.2 REACH Regulation

As supplier of LED lighting systems, EFFILUX declares that the products manufactured by Effilux are compliant with REACH Regulation 1907/2006/CE. These products are not classified as hazardous. We hereby certify that these products do not contain any Substance of Very High Concern (SVHC) in amounts >0.1% (w/w).

1.6 Information on disposal



1. **Disposal of Waste Electrical & Electronic Equipment**

   This symbol on the product(s) and / or accompanying documents means that used electrical and electronic products should not be mixed with general household waste. For proper treatment, recovery and recycling, please contact your supplier or the manufacturer. Disposing of this product correctly will help save valuable resources and prevent any potential negative effects on human health and the environment, which could otherwise arise from inappropriate waste handling.

2. **Removal of batteries**

   If the products contain batteries and accumulators that can be removed from the product without destruction, these must be removed before disposal and disposed of separately as batteries.

   The following batteries or accumulators are contained in the rc_randomdot: None

3. **Options for returning old equipment**

   Owners of old devices can return them to the manufacturer to ensure proper disposal.

   Please *contact support* (Section 8) about returning the device for disposal.

4. **Data protection**

   End users of Electrical & Electronic Equipment are responsible for deleting personal data on the waste equipment to be disposed of.

5. **WEEE registration number**

   Basler is registered under the registration number DE 83888045 at the stiftung elektro-altgeräte register, Nordostpark 72, 90411 Nuremberg, Germany, as a producer of electrical and/or electronic equipment.

6. **Collection and recovery quotas**

   According to the WEEE Directive, EU member states are obliged to collect data on waste electrical and electronic equipment and to transmit this data to the European Commission. Further information can be found on the German Ministry for the Environment website.

Information on Disposal outside the European Union

This symbol is valid only in the European Union. If you wish to discard this product please contact your local authorities or dealer and ask for the correct method of disposal.

2 Safety

Warning: The operator must have read and understood all of the instructions in this manual before handling the *rc_randomdot* product.

Warning: If operating the *rc_randomdot* with *rc_visard* product(s), the operator must have read and understood all of the safety, installation, and maintenance instructions given in the *rc_visard* manual.

Note: The term “operator” refers to anyone responsible for any of the following tasks performed in conjunction with *rc_randomdot*:

- Installation
- Maintenance
- Inspection
- Calibration
- Programming
- Decommissioning

This manual explains the *rc_randomdot*’s various components and general operations regarding the product’s whole life-cycle, from installation through operation to decommissioning.

The drawings and photos in this documentation are representative examples; differences may exist between them and the delivered product.

2.1 General warnings

Note: Any use of the *rc_randomdot* in noncompliance with these warnings is inappropriate and may cause injury or damage as well as void the warranty.

Warning:

- Do not look directly into the projected beam. Do not look at the beam with an optical instrument.
- Looking at the sun through the lens might cause damage to the eyes. Directing the lens at the sun might start a fire.
- The *rc_randomdot* is protected according to IP54. High humidity or temperature can damage the device. Do not operate in an environment where combustible or explosive fumes may occur.
- The *rc_randomdot* needs to be properly mounted before use.
- The supplied mounting bracket is not suitable to mount the *rc_randomdot* on a robot.

- All cable sets need to be secured to the *rc_randomdot* and the mount.
- Cables must not be longer than 30 m.
- An appropriate power supply, which conforms to the EN 62368-1 standard must be used to supply power to the *rc_randomdot*.
- Check polarity and connections.
- The *rc_randomdot*'s housing must be grounded.

Warning:

- The *rc_randomdot*'s and any related equipment's safety guidelines must always be satisfied.
- The *rc_randomdot* does not fall under the purview of the machinery or medical directives.

Risk assessment and final application: The *rc_randomdot* may be used on a robot together with an *rc_visard*. Robot, *rc_visard*, *rc_randomdot*, and any other equipment used in the final application must be evaluated with a risk assessment. The system integrator's duty is to ensure respect for all local safety measures and regulations. Depending on the application, there may be risks that need additional protection/safety measures.

2.2 Intended use

The *rc_randomdot* is intended to be used in combination with a Basler *rc_visard* to increase the scene density and hence improve the quality of stereo matching when the natural scene texture is low. The *rc_randomdot* together with a Basler *rc_visard* are intended for installation on a robot, automated machinery, mobile platform, or stationary equipment. They can also be used for data acquisition in other applications.

Warning: The *rc_randomdot* is **NOT** intended for safety critical applications.

The *rc_randomdot* may be used only within the scope of its technical specification. Any other use of the product is deemed unintended use. Basler will not be liable for any damages resulting from any improper or unintended use.

Warning: Always comply with local and/or national laws, regulations and directives on automation safety and general machine safety.

3 Hardware specification

Note: The following hardware specifications are provided here as a general reference; differences with the product may exist.

3.1 Scope of delivery

Standard delivery for an *rc_randomdot* includes the *rc_randomdot* projector, the mounting bracket and 4 screws, a 30 cm cable to connect the *rc_randomdot* to the *rc_visard*, and a quickstart guide.

The full manual is available in digital form at https://www.baslerweb.com/baslermedia/3d.

The following picture shows the important parts of the *rc_randomdot* which are referenced later in the documentation.

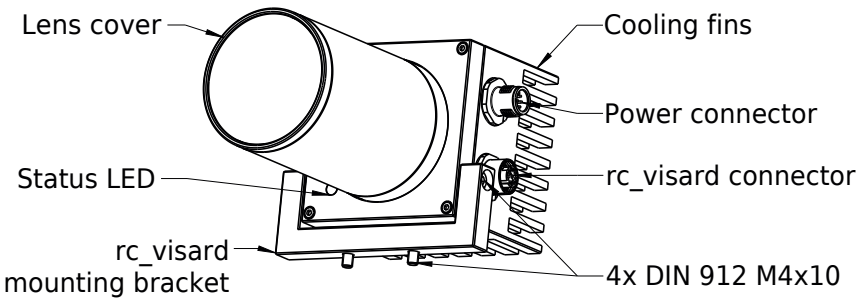

Fig. 3.1: Parts description

3.2 Technical specification

Table 3.1: Technical specifications for the *rc_randomdot White*

	rc_randomdot
Illumination Mode	Strobe
Wavelength	White (5500 K)
Working distance	500 mm to 3000 mm
Field of View	62° x 48° (diagonal 75°)
Lens (C-Mount)	1”, 12 mm, f min 1:1.4
Lens Type	VS Technology VS-1214H1
Power supply	24 V (22 V to 29 V), 44 W (68 W including *rc_visard*)
Connectors	M12, 8 Pin, A-coded
Size (W x H x L)	70 mm x 70 mm x 152 mm
Weight	~ 660 g

3.3 Mechanical dimensions

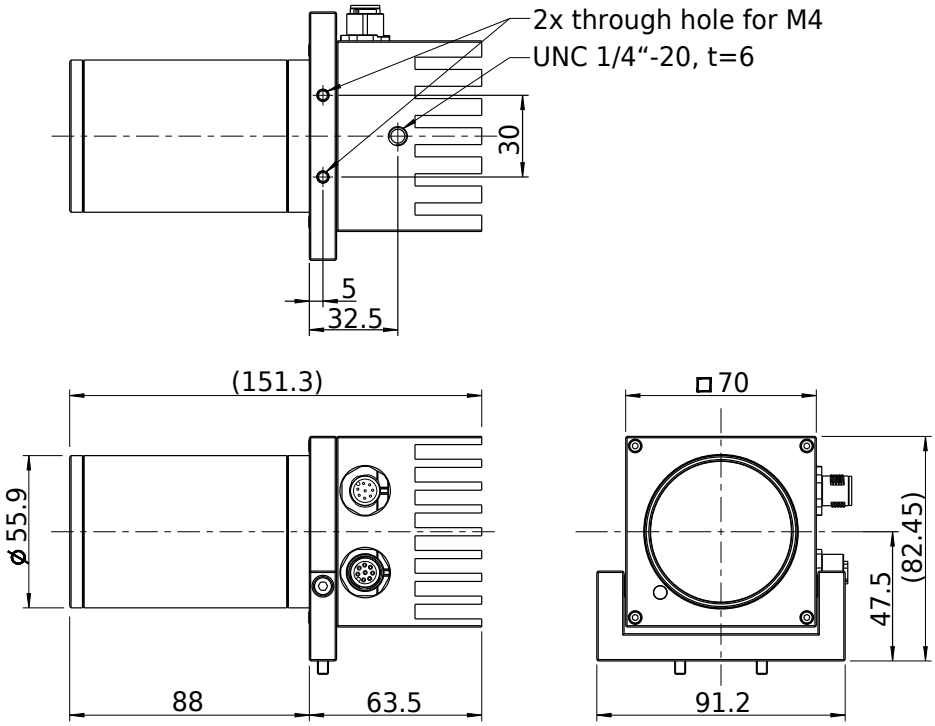

Fig. 3.2: Overall dimensions of the *rc_randomdot White*

CAD models of the *rc_randomdot* can be downloaded from https://www.baslerweb.com/baslermedia/3d. The CAD models are provided as-is, with no guarantee of correctness.

3.4 Environmental and operating conditions

The *rc_randomdot* is designed for industrial applications. Always respect the storage, transport, and operating environmental conditions outlined in Table 3.2.

Table 3.2: Environmental conditions

	rc_randomdot
Storage/Transport temperature	-25 °C to 70 °C
Operating temperature	0 °C to 45 °C
Relative humidity (non condensing)	20 % to 80 %
Vibration	2.5 g
Shock	25 g
Protection class	IP54
Others	• Free from corrosive liquids or gases • Free from explosive liquids or gases • Free from powerful electromagnetic interference

The *rc_randomdot* is designed for an operating temperature (surrounding environment) of 0 °C to 45 °C and relies on convective (passive) cooling. Unobstructed airflow, especially around the cooling fins,

needs to be ensured during use. The *rc_randomdot* should only be mounted on top of the *rc_visard* using the provided mechanical mounting interface, and all parts of the housing must remain uncovered. A free space of at least 10 cm extending in all directions from the two devices, and sufficient air exchange with the environment is required to ensure adequate cooling. Cooling fins must be free of dirt and other contamination.

The housing temperature depends on the exposure time, exposure mode, sensor orientation, and surrounding environmental temperatures. When the projector's power LED temperature exceeds 75°C (corresponding to a housing temperature of approximately 60°C), the LED at the front will turn red.

3.5 Power-supply specifications

The *rc_randomdot* needs to be supplied by a DC voltage source and will in turn power a connected *rc_visard*. The *rc_randomdot*'s standard package doesn't include a DC power supply. The power supply contained in the connectivity kit may be used for initial setup. For permanent installation, it is the customer's responsibility to provide suitable DC power. Each *rc_randomdot* and *rc_visard* pair must be connected to a separate power supply. Connection to domestic grid power is only allowed through a power supply according EN 62368-1.

Table 3.3: Absolute maximum ratings for power supply

	Min	*Nominal*	*Max*
Supply voltage	22.0 V	24 V	29.0 V
Max power consumption			40 W
Max power consumption during exposure incl. *rc_visard*			65 W
Overcurrent protection	Supply must be fuse-protected to a maximum of 2 A		
Standards compliance	see *Electronical and safety standards* (Section 1.4)		

Warning: Exceeding maximum power rating values may lead to damage to the *rc_randomdot*, *rc_visard*, power supply, and connected equipment.

Warning: A separate power supply must power each *rc_randomdot* and *rc_visard* pair.

Warning: Connection to domestic grid power is allowed through a power supply certified according to EN 62368 and as EN55011 Class B only.

3.6 Wiring

Only a 30 cm cable connecting the *rc_randomdot* to the *rc_visard* is supplied with the standard package. It is the customer's responsibility to obtain the proper cabling for connecting the *rc_randomdot* to power. A suggestion of components can be found in *Accessories* (Section 6) .

Warning: Proper cable management is mandatory. Cabling must always be secured to the *rc_visard* and *rc_randomdot* base with a strain-relief clamp so that no forces due to cable movements are exerted on the devices' M12 connectors. In robotic applications, enough slack needs to be provided to allow for full range of movement of the *rc_visard* and *rc_randomdot* without straining the cables. The cables' minimum bend radii need to be observed.

The *rc_randomdot* provides an industrial 8-pin A-coded M12 plug connector for power and GPIO connectivity and an 8-pin A-coded M12 socket connector for connectivity to the *rc_visard*. Both connectors are located on the left side of the *rc_randomdot* as indicated in Fig. 3.1. Type and orientation of the connectors is shown in Fig. 3.3.

Connectors are rotated so that standard 90° angled connectors will exit horizontally, towards the back of the projector.

The power supply must be connected to the top (plug) M12 connector of the *rc_randomdot*. Make sure to check the polarity of your power supply as reverse polarity will damage the *rc_randomdot*. The bottom (socket) M12 connector is connected to the bottom M12 connector of the *rc_visard* with the supplied 30 cm M12 shielded cable.

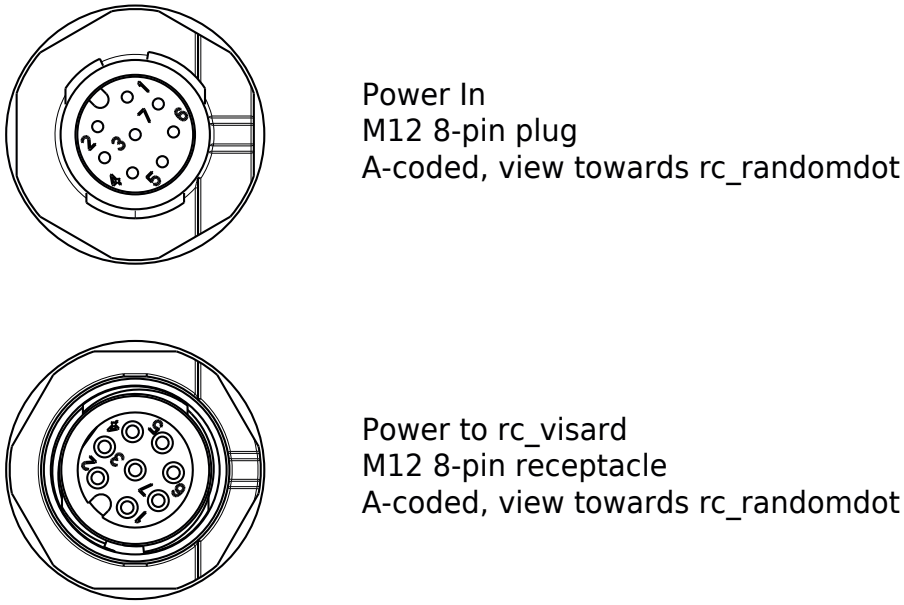

Fig. 3.3: Pin positions for Power IN/GPIO (top) and *rc_visard* (bottom) connector

Pin assignments for the Power IN connector are given in Table 3.4.

Table 3.4: Pin assignments for the Power IN connector

Pin	*Assignment*	*Reference*
1	N/C	/
2	+24 V Power IN	GND
3	GPIO In 1 Robot	GPIO GND
4	GPIO GND	GPIO GND
5	GPIO Vcc	chassis GND
6	GPIO Out 1 Robot (image exposure)	chassis GND
7	GND	GND
8	GPIO Out 2	chassis GND

Pin assignments for the *rc_visard* connector are given in Table 3.5.

Table 3.5: Pin assignments for the *rc_visard* connector

Pin	*Assignment*	*Reference*
1	GPIO Out 2 (Overtemp): 1 = OK (24 V), 0 = !OK (0 V)	chassis GND
2	+24 V Power OUT	GND
3	GPIO Out 1	chassis GND
4	GND (GPIO GND)	GND
5	+24 V (GPIO Vcc)	GND
6	GPIO In 1 (Light Trigger)	GND
7	GND	GND
8	GPIO In 2	GND

All GPIOs are decoupled by photocoupler. *GPIO In 1* needs to be connected to the *rc_visard GPIO Out 1* signal, which can be set to provide an exposure sync signal using the *rc_visard*'s IOControl module. A logic high level of the *rc_visard*'s *GPIO Out 1* signal triggers the projector light. The projector is *ON* as long as *GPIO In 1* is *HIGH*.

GPIO Out 2 of the projector provides a 'projector present' signal that is high when an *rc_randomdot* projector is connected to the *rc_visard* and operating normally. The signal will transition to low during fault (overtemperature) conditions. The status of the *rc_visard* GPIOs is available in every image via the GigE Vision "Chunk Data". For more details, please refer to https://doc.rc-visard.com/latest/en/gigevision.html#chunk-data.

Note:

- The state of the *rc_randomdot GPIO In 1* is mirrored to *GPIO Out 1 Robot*
- The state of the *rc_randomdot GPIO In 2* is mirrored to *GPIO Out 2 Robot*
- The state of the *rc_randomdot GPIO In 1 Robot* is mirrored to *GPIO Out 1*

Pins of unused GPIOs should be left floating.

GPIO circuitry and specifications are shown in Fig. 3.4. The maximum rated voltage for *GPIO In* and *GPIO Vcc* is 29 V.

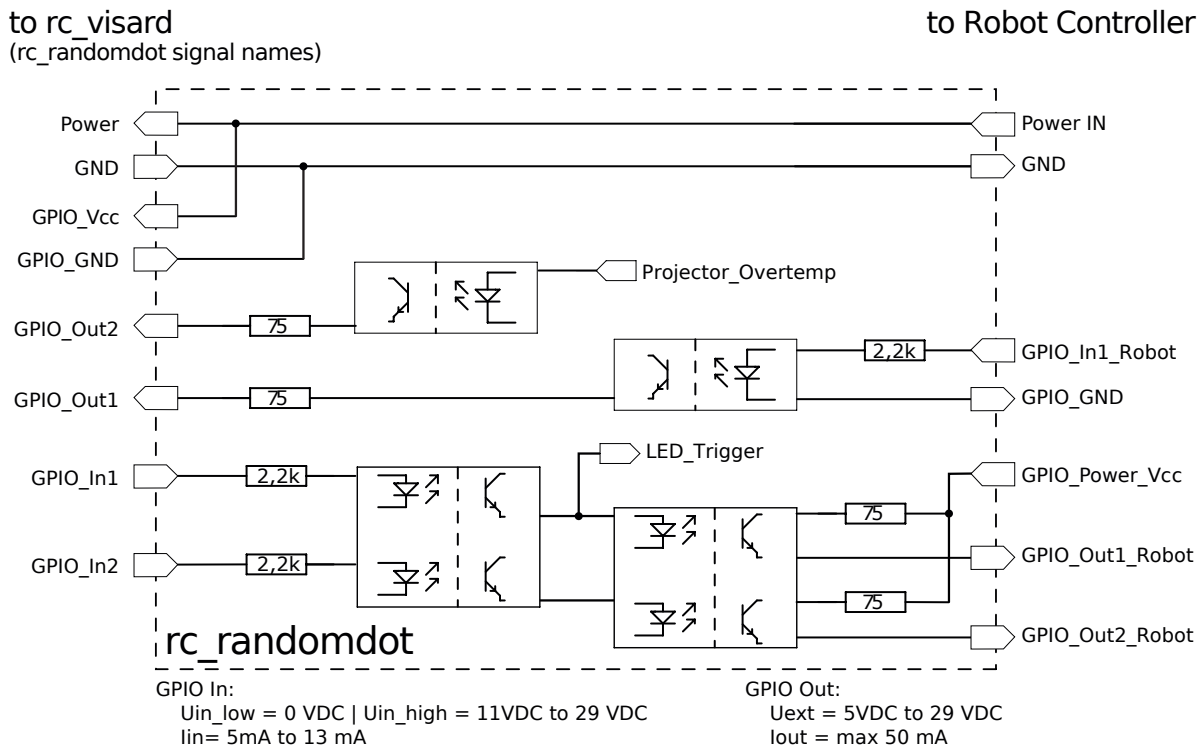

Fig. 3.4: GPIO circuitry and specifications – do not connect signals higher than 29 V

Warning: Do not connect signals with voltages higher than 29 V to the *rc_randomdot*.

3.7 Electrical properties

The power LED driver inside the *rc_randomdot* is set to automatically pulse the LED according to the state of the *GPIO In 1* trigger pin.

For a short trigger pulse (< 25 ms), the projector is driven at maximum power (projector LED maximum current of 2,2 A). If the pulse is longer, the driver automatically decreases projector LED current to 0,4 A (18% of max current) to protect the projector LED against damage.

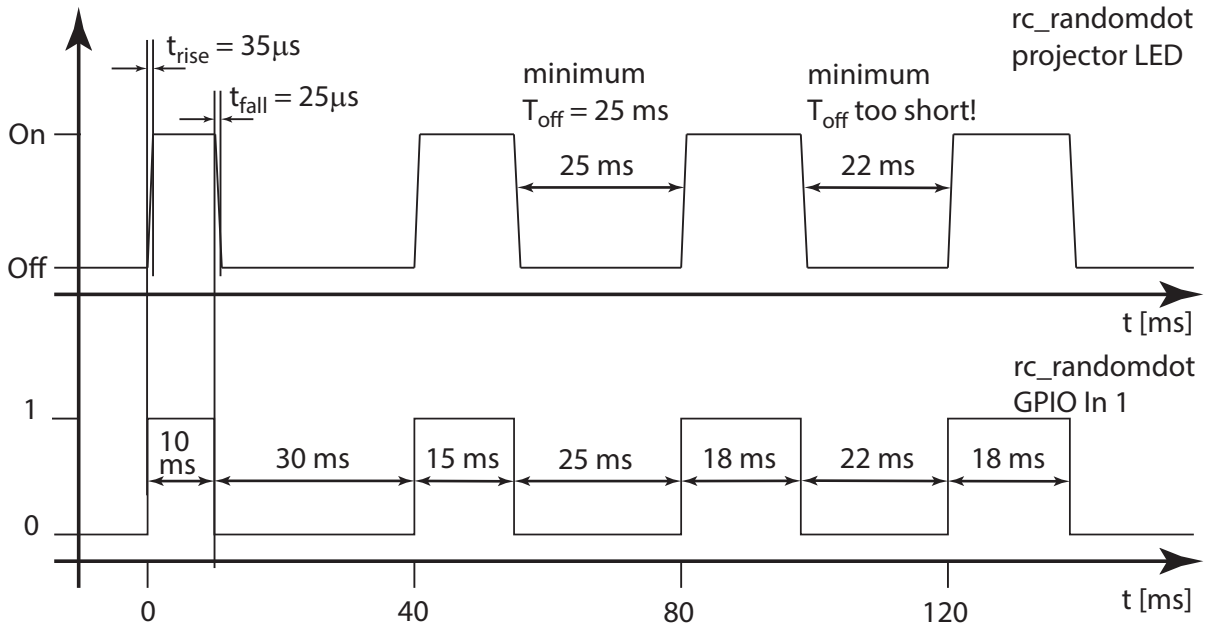

Fig. 3.5: Timing of the projector LED with respect to the *rc_randomdot GPIO In 1* pin

Fig. 3.5 shows the timing properties of the *rc_randomdot* projector LED with respect to the *rc_randomdot*'s *GPIO In 1*. Please note that the *rc_randomdot* must be turned off for a minimum of 25 ms between light pulses. This limits the maximum allowed exposure time of the connected *rc_visard* to 15 ms in *ExposureActive* mode to prevent overheating of the *rc_randomdot*. It is the user's responsibility to limit the exposure time of the *rc_visard* accordingly. In *ExposureAlternateActive* mode, the full 18 ms exposure time of the *rc_visard* may be used as only every second exposure triggers the *rc_randomdot*.

For an in depth description of *rc_visard* projector control settings and operating modes, please refer to the IO and Projector Control section in the full *rc_visard* documentation at https://doc.rc-visard.com/latest/en/iocontrol.html .

Warning: In *ExposureActive* mode, the exposure time of the *rc_visard* must be limited to a maximum of 15 ms to prevent overheating of the *rc_randomdot*. It is the user's responsibility to ensure this setting.

Table 3.6: Status LED colors

Status LED color	*rc_randomdot*
Red	Overtemperature warning projector LED temperature > 75 °C
Green	Power ON
Blue	Trigger Signal active, projector LED ON

3.8 Optical properties

The *rc_randomdot* projects a rectangular pattern of semirandom dots with 50% density. Optimal working distance is between 500 mm and 3 m. Focus and the aperture can be adjusted with manual settings of the C-mount lens.

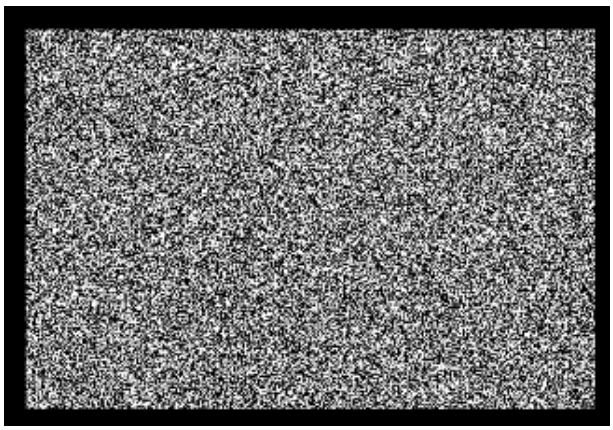

Fig. 3.6: Projected pattern of semirandom dots with 50% density

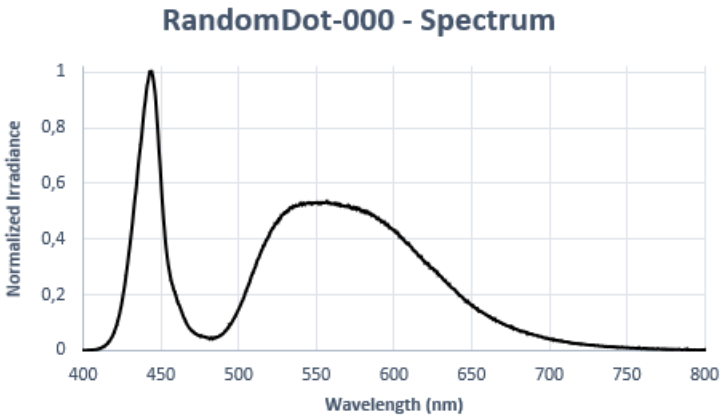

Fig. 3.7: Emission spectrum of the *rc_randomdot White*

4 Installation

Warning: The instructions on *Safety* (Section 2) related to the *rc_randomdot* and *rc_visard* must be read and understood prior to installation.

4.1 Mounting

The *rc_randomdot* offers a mounting-point setup with standard tripod thread at the bottom, and pivot points for the provided mounting bracket on either side.

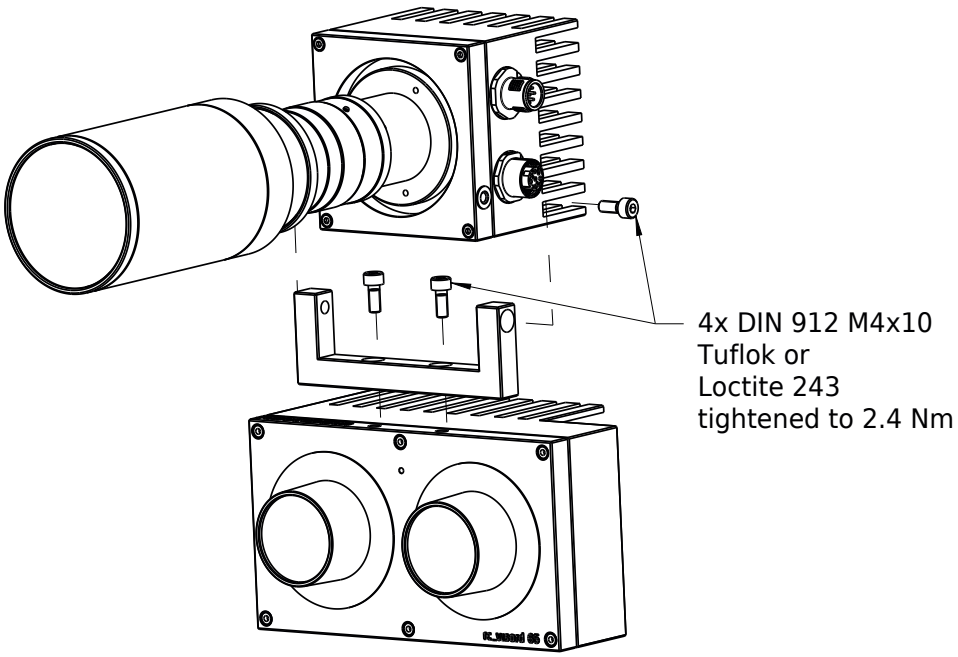

Fig. 4.1: Mounting bracket for connecting the *rc_randomdot* to the *rc_visard*

For troubleshooting purposes, the projector may be mounted using the standardized tripod thread (UNC 1/4”-20) at the bottom of the housing. For mounting the *rc_randomdot* on top of an *rc_visard* in static or low dynamic applications (e.g. above robot cells or on mobile platforms), the supplied mounting bracket must be attached to the *rc_visard* with two M4 x 10 8.8 machine screws, and the projector must be attached to the mounting bracket with two M4 x 10 8.8 machine screws at the pivot points. All screws must be tightened to 2.4 Nm and only TufLok nylon coated screws may be used. Alternatively screws need to be secured with a medium-strength threadlocking adhesive such as Loctite 243. Maximum thread depth is 6 mm. The supplied mounting bracket is not suitable for dynamic robot applications. It is the customer’s responsibility to provide adequate mounting of the *rc_randomdot*.

Warning: For permanent installations, the *rc_randomdot* must be mounted with four M4 x 10 8.8 machine screws tightened to 2.4 Nm torque. Screws must be Tuflok coated or secured with thread-locking adhesive. Do not use high-strength bolts.

Warning: The supplied mounting bracket is not suitable for dynamic robot applications. It is the customer's responsibility to provide adequate mounting of the *rc_randomdot*.

Depending on the working distance, it might be necessary to tilt the projector downwards to cover the complete filed of view of the *rc_visard*. This can be accomplished by loosening the screws attaching the *rc_randomdot* to the mounting bracket at the pivot point, and moving the *rc_randomdot* to the desired angle.

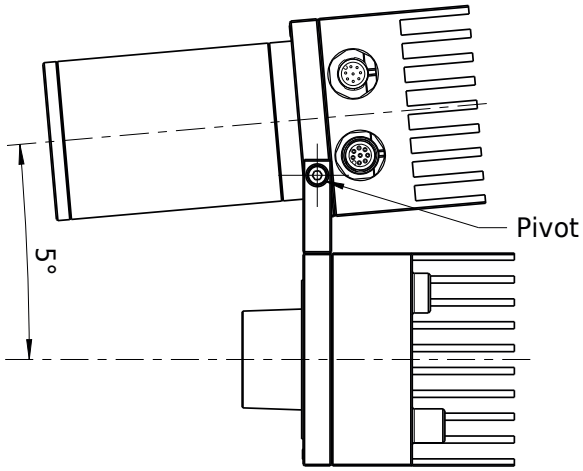

Fig. 4.2: Setting the desired tilt angle between *rc_randomdot* and *rc_visard*

4.2 Power-up

After mounting the projector on the *rc_visard*, connect power and network cables as shown in the following drawing:

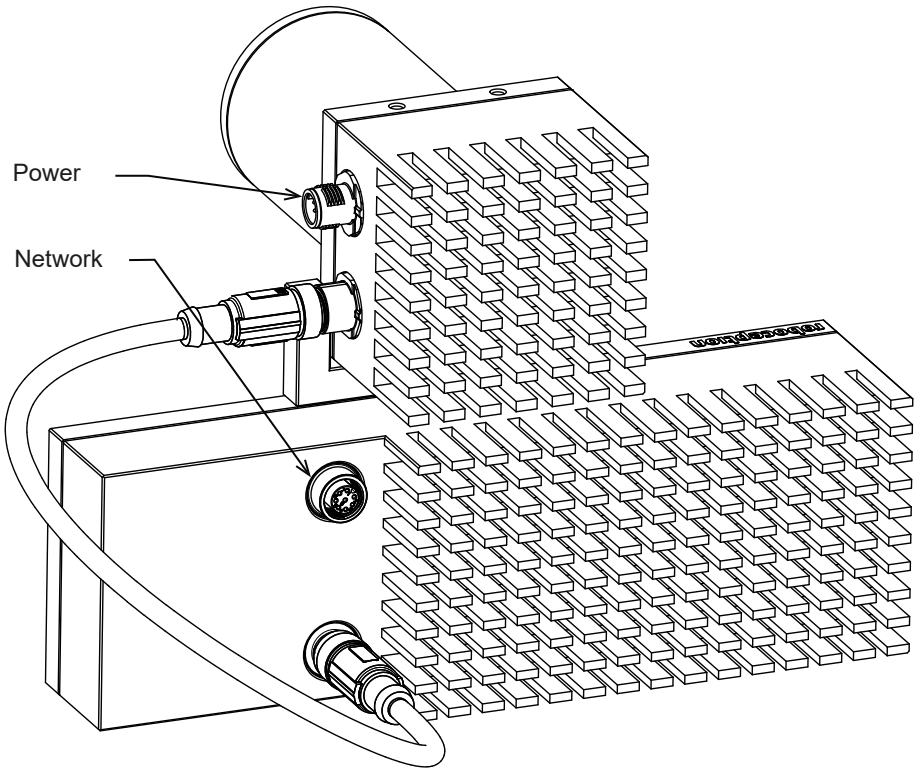

Fig. 4.3: Connections on *rc_randomdot* and *rc_visard*

Note: Always fully connect and tighten all M12 connectors on the both the *rc_visard* and *rc_randomdot* *before* turning on the power supply.

After connecting the system to power, the LEDs on the front of the *rc_randomdot* and *rc_visard* should immediately illuminate. During the *rc_visard*'s boot process, it's LED will change color and will eventually turn green. This signals that all processes are up and running. The *rc_randomdot*'s status LED should turn green right away. The *rc_randomdot* projector will flash a number of times during the boot process.

Warning: Do not look into the lens of the *rc_randomdot* or into the light beam at any point during startup or operation.

For troubleshooting the *rc_visard*'s boot process and connections, please refer to the *rc_visard* documentation at https://doc.rc-visard.com/latest/en/troubleshooting.html#led-colors.

4.3 Operating the projector

The *rc_randomdot* projector is controlled via the GPIO Out 1 of the *rc_visard*.

State and behavior of the *rc_visard*'s GPIOs can then be controlled via the *rc_visard*'s WebGUI IOControl panel from the Modules tab. Starting with *rc_visard* firmware 20.10, GPIO Out 1 is set to *Low* by default, turning the projector off. *ExposureActive* turns on the *rc_randomdot* for exactly the exposure time of every image. *High* will turn the projector on continuously, but reduce power to 18% to protect the light source.

Typically, the user will select *ExposureAlternateActive* mode, in which the *rc_randomdot* is on only for the exposure time of every second image. Images with projected pattern are used for computing depth images. Images without pattern can be used for texture or other image processing modules.

In *ExposureAlternateActive* mode, the *rc_visard*'s auto exposure algorithm ensures that images with pattern are correctly exposed in order to produce dense disparity images. As identical exposure settings are used for the images without pattern, which are displayed in the WebGUI, those might be underexposed depending on overall illumination conditions. This effect can be minimized by properly adjusting environmental light conditions, projector lens aperture, and exposure time.

4.4 Adjusting focus

During production, the focus of the *rc_randomdot* is set to a distance 1.2 m by default. When the projector is used for a very different working distance, adapting the focus might be necessary. Perfectly focusing the projector is not crucial. A slightly blurred projection pattern will not degrade the depth image.

To inspect the sharpness of the projector pattern, the projector should be turned on permanently by setting the *Out1 / Projector* mode to `High` on the Web GUI under *Camera* → *IOControl Settings* or *Configuration* → *IOControl*.

The projector focus only needs to be adjusted when the projector pattern is strongly blurred. In this case, remove the *rc_randomdot*'s protective lens cap by unscrewing it. Then loosen the three small fixing Phillips screws on the focus ring as shown in Fig. 4.4. Then, turn the focus ring until the visible projector pattern becomes sharp. After that, lightly tighten the focus ring screws again and replace the protective lens cap to restore the IP54 rating and EMC compatibility of the projector.

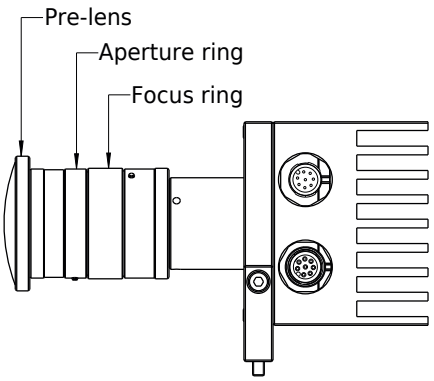

Fig. 4.4: Focus and aperture ring on the *rc_randomdot White*

4.5 Adjusting aperture

The aperture of the *rc_randomdot* influences the brightness of the projector pattern. By default, the aperture of the *rc_randomdot* is fully open, which means the projector has maximum brightness. The aperture should be adjusted so that the brightness difference between images taken with projector and images taken without projector is not too large, but the projector pattern is still visible in the images taken with projector. To find the correct setting, make sure the external light in the working environment is similar to what is expected during productive mode and the camera with the *rc_randomdot* is mounted at the desired distance from the scene.

Then, on the Web GUI under *Camera*, set the *Exposure* mode to `Auto` and set the *Auto Exposure Mode* to `AdaptiveOut1`. Also set the *Out1 / Projector* mode to `ExposureAlternateActive` under *IOControl Settings*, so that every second image is taken with projector pattern. Now, the text line under the live images shows the *Out1 reduction* value in percent.

The *Out1 reduction* value describes the reduction of the brightness of the image without projection compared to the image with projection. The value should be between 10% and 20%. A higher *Out1 reduction* value means, that the projector is too bright compared to the external lighting, which leads to images without projector patterns being too dark. Thus, external lighting should be increased, e.g. by installing

an additional light source, or the brightness of the projector should be reduced by slightly closing the aperture. In analogy, if the *Out1 reduction* value is too low, the projector is not bright enough compared to the external light, which means that the projector pattern will hardly be visible in the camera images and cannot enhance the depth computation. So the external light should be reduced or the projector brightness must be increased by opening the aperture.

The aperture of the projector can be adjusted by removing the *rc_randomdot*'s protective lens cap by unscrewing it. Then loosen the three small fixing Phillips screws on the aperture ring as shown in Fig. 4.4. Now turn the ring until the *Out1 reduction* value is in the range between 10% and 20%.

After that, the darkest object that is possible in the application should be placed in the field of view of the camera. If the dark object is not properly visible in the depth image, then the projector brightness must be increased, despite high *Out1 reduction* values.

In the end, lightly tighten the aperture ring screws again and replace the protective lens cap to restore the IP54 rating and EMC compatibility of the projector.

5 Maintenance

Warning: The only part removable by the customer is the lens cap, which can be unscrewed. The customer does not need to open the *rc_randomdot*'s housing to perform maintenance. Unauthorized opening of the housing will void the warranty. For all maintenance operations other than adjusting focus and aperture, the product must be switched off.

To handle the optical components, wearing gloves is strongly recommended. The lens cap can be removed by unscrewing the barrel. Then focus and the aperture can be adjusted with manual settings of the C-mount lens.

Warning: The lens cap needs to be in place during normal operation to meet EMC requirements.

5.1 Lens cleaning

Glass lenses with antireflective coating are used to reduce glare. Please take special care when cleaning the lenses. To clean them, use a compressed air duster or soft lens-cleaning brush to remove dust or dirt particles. To remove stubborn dirt, wipe 1-2 drops of a non-alcohol-based lens cleaning solution formulated for coated lenses (such as the Uvex Clear family of products) in a gentle circular motion with a cleaning tissue. Always apply the fluid to a tissue rather than the lens itself.

6 Accessories

6.1 Connectivity kit

For permanent installation, the customer is responsible for providing a suitable power supply.

Connecting the *rc_visard* and *rc_randomdot* to residential or office grid power requires a power supply that meets EN 55011 Class B emission standards and/or EN 55032 Class B emission standards. The power supply contained in the connectivity kit is certified accordingly. However, it does not meet immunity standards for industrial environments under EN 61000-6-2.

6.2 Wiring

Only a short cable to connect power and GPIOs between *rc_visard* and *rc_randomdot* is supplied as standard equipment with the *rc_randomdot*. It can be used for permanently connecting an *rc_visard* to an *rc_randomdot* mounted on top of it. It is the customer's responsibility to obtain appropriate parts for all other scenarios. The following sections provide an overview of suggested components.

6.2.1 Power connections

The *rc_randomdot* contains an 8-pin A-coded M12 plug connector for power and GPIO connectivity to the robot controller. Various cabling solutions can be obtained from third party vendors. A selection of M12 to open ended cables is provided below. Customers are required to provide power and GPIO connections to the cables according to the pinouts described in *Wiring* (Section 3.6). Both the *rc_visard*'s and *rc_randomdot*'s housing must be connected to ground.

Sensor/Actor cable M12 socket to open end

- Straight M12 socket connector to open end, shielded, 10m length: Phoenix Contact SAC-8P-10,0-PUR/M12FS SH, Art.Nr.: 1522891
- Angled M12 socket connector to open end, shielded 10m length: Phoenix Contact SAC-8P-10,0-PUR/M12FR SH, Art.Nr.: 1522943

Sensor/Actor M12 socket for field termination

- Phoenix Contact SACC-M12FS-8CON-PG9-M, Art.Nr.:1513347
- TE Connectivity T4110001081-000 (plastic housing)

6.2.2 Power supplies

The *rc_visard* and *rc_randomdot* are classified as EN-55011 Class B devices and are immune to light industrial and industrial environments. For connecting the sensor to residential grid power, a power supply under EN 55011/55022 Class B has to be used.

It is the customer's responsibility to obtain and install a suitable power supply for permanent use in industrial environments. One example that satisfies both EN 61000-6-2 and EN 55011/55022 Class B is the DIN-Rail mounted PULS MiniLine ML70.100 24V/DC 3 A by PULS GmbH (http://www.pulspower.com). A certified electrician must perform installation.

Only one set of *rc_visard* and *rc_randomdot* shall be connected to a power supply at any time, and the total length of cables must be less than 30 m.

6.3 Spare parts

No user-serviceable spare parts are currently available for *rc_randomdot* devices.

7 Troubleshooting

7.1 LED colors

During the boot process of the *rc_visard*, the *rc_randomdot* will flash several times. The status LED will should turn green almost immediately. During normal operation the following colors of the *rc_randomdot* can be observed.

Table 7.1: *rc_randomdot* status LED colors

LED color	*rc_randomdot* status
red	Overtemperature Warning: Projector temperature has exceeded 75°C
blue	Trigger signal active
green	*rc_randomdot* is ready

7.2 Hardware issues

LED does not illuminate

The *rc_randomdot* does not start up.

- Ensure that cables are connected and secured properly.
- Ensure that adequate DC voltage (22 V to 29 V) with correct polarity is applied to the power connector at the pins labeled as **Power** and **Ground** as described in the device's *pin assignment specification* (Section 3.4). Connecting the sensor to voltage outside of the specified range, to alternating current, with reversed polarity, or to a supply with voltage spikes will lead to permanent hardware damage.

LED turns red while the projector appears to function normally

This may indicate a high housing and power LED temperature. The projector might be mounted in a position that obstructs free airflow around the cooling fins.

- Clean cooling fins and housing.
- Ensure a minimum of 10 cm free space in all directions around cooling fins to provide adequate convective cooling.
- Ensure that ambient temperature is within specified range.

The projector may turn off when cooling is insufficient or the ambient temperature exceeds the specified range.

Reliability issues and/or mechanical damage

This may be an indication of ambient conditions (vibration, shock, resonance, and temperature) being outside of specified range. Please refer to the *specification of environmental conditions* (Section 3.2).

- Operating the *rc_randomdot* outside of specified ambient conditions might lead to damage and will void the warranty.

Electrical shock when touching the projector

This indicates an electrical fault in sensor, cabling, or power supply or adjacent system.

- Immediately turn off power to the system, disconnect cables, and have a qualified electrician check the setup.
- Ensure that the projector housing is properly grounded; check for large ground loops.

8 Contact

8.1 Support

For support issues, please see https://www.baslerweb.com/en/sales-support/support-contact/ or contact

Technical Support Team

Europe, Middle East, Africa
+49 4102 463 515
support.europe@baslerweb.com

The Americas
+1 610 280 0171
support.usa@baslerweb.com

Asia-Pacific
+65 6367 1355
support.asia@baslerweb.com

8.2 Address

Basler AG
An der Strusbek 60-62
22926 Ahrensburg
Germany

Web: https://www.baslerweb.com
Email: info@baslerweb.com
Phone: +49 4102 463 0

Index

A

aperture, 21

C

cables, 13, 24
CAD model, 12
components
    rc_randomdot, 11
cooling, 12

D

dimensions
    rc_randomdot, 12

E

electrical, 16
ExposureActive
    IOControl, 20
ExposureAlternateActive
    IOControl, 20

F

field of view, 11
focus, 21

G

GPIO
    pin assignments, 14

H

High
    IOControl, 20
housing temperature
    LED, 13
humidity, 12

I

installation, 18
IOControl
    ExposureActive, 20
    ExposureAlternateActive, 20
    High, 20
    Low, 20
IP54, 12

L

LED
    colors, 26
    housing temperature, 13
lens cleaning, 23
Low
    IOControl, 20

M

maintenance, 23
mounting, 18

O

operating conditions, 12
operation, 20
optical, 17

P

pin assignments
    GPIO, 14
    power, 14
power
    pin assignments, 14
power cable, 24
power supply, 13, 24
power-up, 19
projected pattern, 17
protection class, 12

R

rc_randomdot
    components, 11

S

spare parts, 25
specifications
    rc_randomdot, 11
spectrum, 17
status LED, 16

T

temperature range, 12
tilt, 19
timing, 16

W

wavelength, 11, 17

rc_randomdot Random Dot Projector

ASSEMBLY AND OPERATING MANUAL

Basler AG

An der Strusbek 60-62
22926 Ahrensburg
Germany

info@baslerweb.com
https://www.baslerweb.com

For customer support, contact

+49 4102 463 515
+1 610 280 0171
+65 6367 1355

support.europe@baslerweb.com
support.usa@baslerweb.com
support.asia@baslerweb.com